CENTRAL MAPPING AUTHORITY

Department of Lands

Trigonometrical Survey of N.S.W.

74-98

RECONNAISSANCE and MAINTENANCE REPORT

STATION ABINGTON G.S. 583

Co: | Ph:

Map Sheet: NUMBLA | No: 8624 NORTH

Inspected by: A WOODRUFF | Date: 28/1/77.

Authority CENTRAL MAPPING | Field Book: 1530

This Trig. Station has been:- *Note: Cross out word or words which do not apply*

1. Completely cleared to permit 360° vision to surrounding Trigs. ✓
2. Cleared by lanes bearing 360°M. from Trig. Mast
3. ~~Trig. Mast & Vanes have been painted white & black respectively~~.
4. The Trig. was unpiled/~~not unpiled~~ dimensions now being:

   Description of mark..... should be explicit, e.g. Steel plug, Brass plug, Bolt, G.I. Pipe

   Height of mark 1.22m. m above/~~below~~ rock/~~concrete~~ ..... m above/below G.L.

   Height of Top Vanes to Top Mark 2.67 m. Diameter of Vanes (vertical) 0.3 m.

   Height of Cairn ..... m. Diameter of Cairn ..... m.

   Length of Mast 1.53m m. (approximate if not unpiled)
5. A SMA 333C set in conc/~~rock~~ has been ~~placed~~ FOUND. 5.798 m. bearing 186°M °M from Trig. Mast
6. A G.I. PIPE set in ~~conc~~/soil has been placed 12.33 m. bearing 237°M °M from ~~Trig. Mast~~ SMA 333C
7. A..... set in conc/soil has been placed ..... m. bearing ..... °M from Trig. Mast
8. A..... set in conc/rock has been placed ..... m. bearing ..... °M from Trig. Mast
9. Connection ..... to ..... : ..... m. bearing ..... °M
10. Connection ..... to ..... : ..... m. bearing ..... °M
11. Connection ..... to ..... : ..... m. bearing ..... °M
12. Connection ..... to ..... : ..... m. bearing ..... °M
13. Diff. Ht. SMA 333C is 1.63 m. above/~~below~~ PILLAR PLATE ABINGTON GS
14. Diff. Ht. SMA 333C is 1.51 m. above/~~below~~ G.I. PIPE PLACED ✓
15. Diff. Ht. ..... is ..... m. above/below .....
16. Diff. Ht. ..... is ..... m. above/below .....

Beacon Diagram — Not to Scale

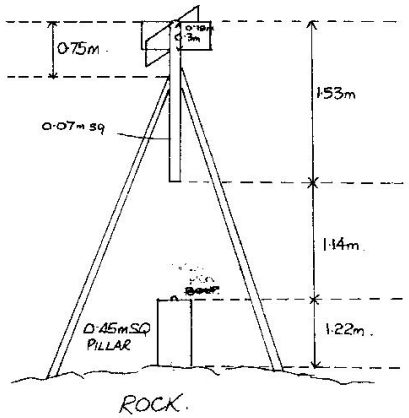

Date	Record of Station

Prepared by: Alan Woodruff. Checked: [illegible] Noted on U.T.M. Card Checked A. Woodruff 27/3/79.

TS583 | Print Date: 31/05/2022 15:07 | No Of Pages: 2 | Property of DFSI – Spatial Services

583

STATION ABINGTON G.S.

Station Diagram

Not to Scale

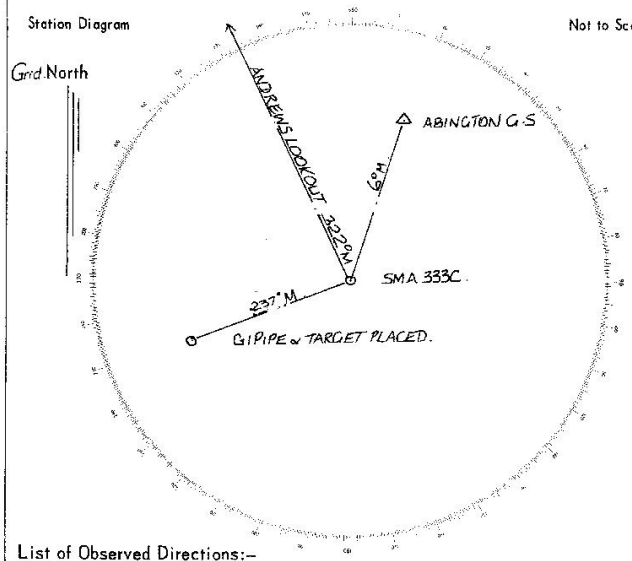

List of Observed Directions:–

Standpoint: SMA 333C

Standpoint:

Station	Direction	Station	Direction
ANDREWS LOOKOUT	00° 00' 00"		
ABINGTON PILLAR SPIGOT	43° 13' 58"		
G.I PIPE PLACED	277° 09' 23"		

Station	Direction	Station	Direction

Owners Name.....

Address.....

.....

Current Occupant.....

Address.....

.....

Access 28-1-77

Access

MILEAGE	DESCRIPTION
0·0Kms.	JINDABYNE P.O head towards Khancoban.
2·0Kms	Turn left towards Ingebyra.
6·3Kms.	Fork right towards Ingebyra.
10·6Kms.	Turn left at old school & Pine trees. "LYNWOOD".
11·2Kms.	"LYNWOOD" on left – Go past property TRIG is on hill straight ahead.
12·5Kms	Turn right through gate just before cattle grid. Make way towards hill and through another gate. Drive up hill (4WD) as far as possible and walk

TS583 | Print Date: 31/05/2022 15:07 | No Of Pages: 2 | Property of DFSI – Spatial Services