CENTRAL MAPPING AUTHORITY

Department of Lands

Trigonometrical Survey of N.S.W.

RECONNAISSANCE and MAINTENANCE REPORT

STATION LOCKYER T.S. (PILLAR) 2873

Co: NORTHUMBERLAND | Ph: LOCKYER

Map Sheet: MORISSET | No: 9131 - N

Inspected by: P JACKSON | Date: 19th JULY 1974

Authority C.M.A. | Field Book: 1355

This Trig. Station has been:- Note: Cross out word or words which do not apply

1. ~~Completely cleared to permit 360° vision to surrounding Trigs.~~
2. Cleared by lanes bearing ..... from Trig. Mast
3. Trig. Mast & Vanes have been painted white & black respectively.
4. The Trig. was unpiled/not unpiled, dimensions now being:

   Description of mark ...TRIG. PILLAR PLACED..... should be explicit, e.g. Steel plug, Brass plug, Bolt, G.I. Pipe

   Height of mark .....0.014 m above ~~below~~ PILLAR PLATE ~~rock/concrete~~ .....1.2 m above ~~below~~ G.L.

   Height of Top Vanes to Top Mark 1.468 m. Diameter of Vanes (vertical) 0.750 m.

   Height of Cairn ..... m. Diameter of Cairn ..... m.

   Length of Mast ....1.572 m. (approximate if not unpiled)

5. A BRASS TRIG PLUG FOUND ...~~set~~ in ~~conc/rock~~ ROCK has been ~~placed~~ FOUND 2.650 m. bearing .....106 .....°M from Trig. Mast
6. A G.I. PIPE ...set in conc/~~soil~~ has been placed ...4.700 m. bearing ....147 .....°M from Trig. Mast
7. A.....set in conc/soil has been placed.....m. bearing.....°M from Trig. Mast
8. A.....set in conc/rock has been placed.....m. bearing.....°M from Trig. Mast
9. Connection TRIG. PLUG to G.I. PIPE : 3.230 m. bearing ...180 ...°M
10. Connection.....to..... : ..... m. bearing.....°M
11. Connection.....to..... : ..... m. bearing.....°M
12. Connection.....to..... : ..... m. bearing.....°M
13. Diff. Ht. PILLAR PLATE ..... is 1.115 m. above ~~below~~ TRIG. PLUG.....
14. Diff. Ht. PILLAR PLATE ..... is 1.120 m. above ~~below~~ G.I. PIPE.....
15. Diff. Ht. TRIG. PLUG ..... is 0.005 m. above ~~below~~ G.I. PIPE.....
16. Diff. Ht. ..... is..... above below .....

Beacon Diagram — Not to Scale

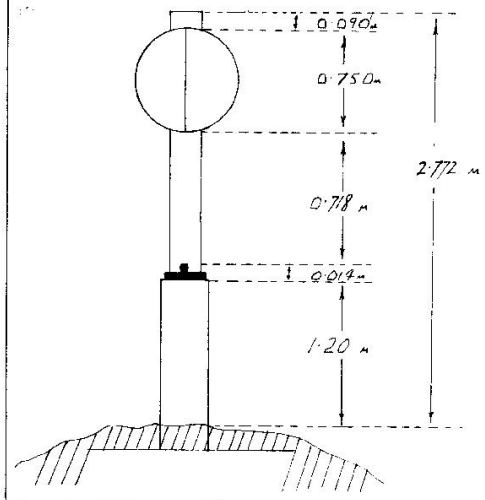

Date	Record of Station

Prepared by: J Fanning Checked: [illegible] 17/1/75 Noted on U.T.M. Card

Checked

TS2873 | Print Date: 31/05/2022 16:05 | No Of Pages: 4 | Property of DFSI – Spatial Services

STATION LOCKYER T.S.O.P. 2873

Station Diagram

Not to Scale

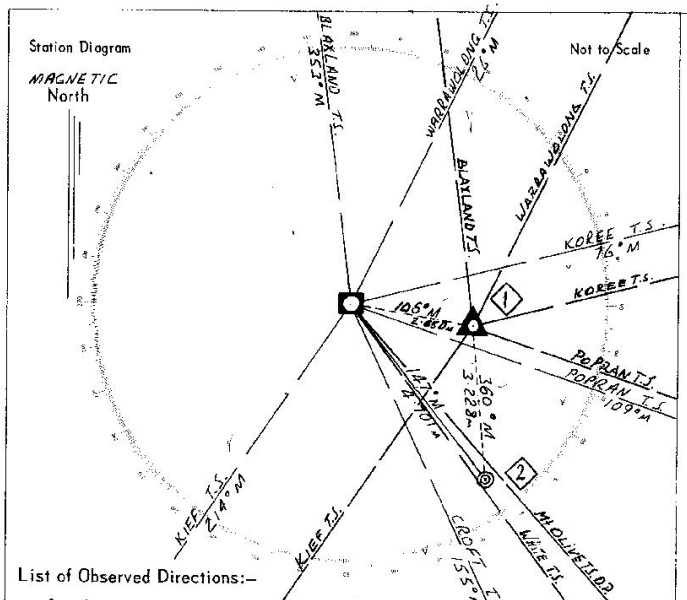

Owners Name.....

Current Occupant.....

Address.....

Address.....

19th/7/1974

Access From KULNURA GENERAL STORE 0.00 miles TAKE CESSNOCK-WOLLOMBI Rd. 12.10 miles TURN LEFT AT Mt. Mc. Quoid intersection (SIGNPOST SAYS. WINDSOR WISEMANS FERRY St. ALBANS.) Follow Dirt track to St. ALBANS. At 15.8 miles turn RIGHT on to QUENTRACK. At 16.1 miles Follow R.H ~~track~~ ARM of FORK, 16.2 Follow R.H ARM OF FORK and at 16.3 R.H. ARM OF FORK AGAIN. At 17.2 miles PASS SANDSTONE FORMATION (OLD BRIDGE) AT 17.9 CROSS SMALL CREEK. KEEP ON TRACK UNTIL SMALL STONE CAIRN ON R.H. SIDE OF Rd 19.7 miles. TURN RIGHT, ON TO VERY FAINT TRACK THROUGH BUSH. AT 20.3 miles PASS SOME BOULDERS AND TAKE TO L.H side OF HILL FOLLOWING A BLAZED TREE TRACK FOR ABT 100 yd. TURN RIGHT FOLLOWING TYRE MARKS TO ALMOST TOP OF RIDGE, PARK CAR AND WALK ALONG RIDGE TO TRIG. STN..

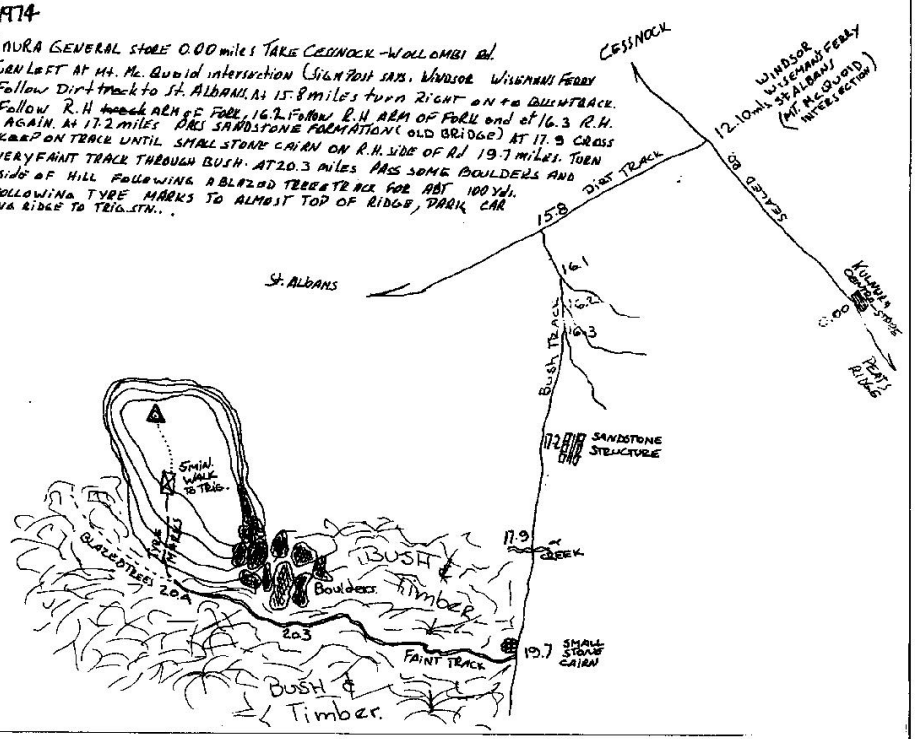

List of Observed Directions:–

Standpoint: TRIG PILLAR

Standpoint: BRASS TRIG. PLUG.

Station	Direction	Station	Direction
KOREE T.S.	359 59 60	WARRAWOLONG T.S.	359 59 60
POPRAN T.S.	32 32 48	KOREE O.P.	49 52 14
MT. OLIVE T.S.O.P.	62 20 43	POPRAN O.P.	82 25 26
WHITE T.S.	67 43 43	G.I. PIPE in Conc. Fd.	148 25
CROFT T.S.	78 50 31	KIEF O.P.	187 50 53

Station	Direction	Station	Direction
KIEF T.S.	137 57 50	LOCKYER Pillar Spigot	254 12
BLAXLAND T.S.	276 38 48	BLAXLAND T.S.	326 30 48
LOCKYER TRIG PLUG	24 19		
G.I. PIPE	65° 41		
WARRAWOLONG T.S.	310 07 48		

TS2873 | Print Date: 31/05/2022 16:05 | No Of Pages: 4 | Property of DFSI – Spatial Services

Department of Lands

Integra Survey of N.S.W.

RECONNAISSANCE and MAINTENANCE REPORT

75-192

STATION LOCKYER T.S. [P] 2873

This Trig. Station has been:- *Note: Cross out word or words which do not apply*

1. ~~Completely cleared to permit 360° vision to surrounding Trigs.~~ Regrowth needs to be cleared
2. Cleared by lanes bearing ..... from Trig. Mast
3. Trig. Mast & Vanes have been painted white & black respectively.
4. The Trig. was unpiled/not unpiled, dimensions now being:

   Description of mark..... should be explicit, e.g. Steel plug, Brass plug, Bolt, Concrete Pillar

   Height of mark.....m above/below rock/concrete .....m above/below G.L.

   Height of Top Vanes to Top Mark/Top pillar plate ..... m Diameter of Vanes (vertical)..... m.

   Height of Cairn.....m. Diameter of Cairn ..... m.

   Length of Mast.....m. (approximate if not unpiled)
5. A.....set in conc/rock has been placed/fd .....m. bearing.....°M from Trig. Mast/pillar
6. A.....set in conc/soil has been placed/fd .....m. bearing.....°M from Trig. Mast/pillar
7. A.....set in conc/soil has been placed/fd .....m. bearing.....°M from Trig. Mast/pillar
8. A.....set in conc/rock has been placed/fd .....m. bearing.....°M from Trig. Mast/pillar
9. Connection.....to..... : ..... m. bearing.....°M
10. Connection.....to..... : ..... m. bearing.....°M
11. Connection.....to..... : ..... m. bearing.....°M
12. Connection.....to..... : ..... m. bearing.....°M
13. Diff. Ht. ..... is..... m. above/below .....
14. Diff. Ht. ..... is..... m. above/below .....
15. Diff. Ht. ..... is..... m. above/below .....
16. Diff. Ht. ..... is..... m. above/below .....

Prepared by: J Cassidy Checked:

Co: NORTHUMBERLAND	Ph: LOCKYER
Map Sheet: KULNURA	No: 9131-4-S
Inspected by: J. CASSIDY	Date: 31/3/95
Authority L.I.C.	Field Book:

Beacon Diagram Not to Scale

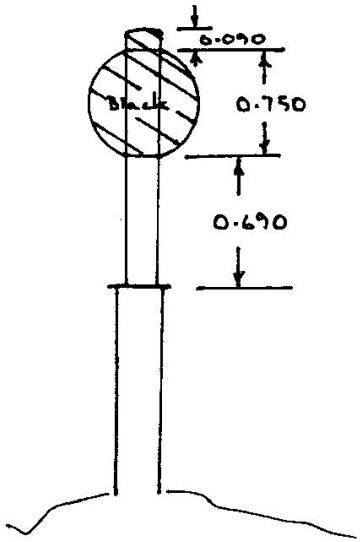

Date	Record of Station
31/3/95	Melted Mast replaced.

TS2873 | Print Date: 31/05/2022 16:05 | No Of Pages: 4 | Property of DFSI – Spatial Services

STATION LOCKYER T.S. [P] 2873

Station Diagram

Not to Scale

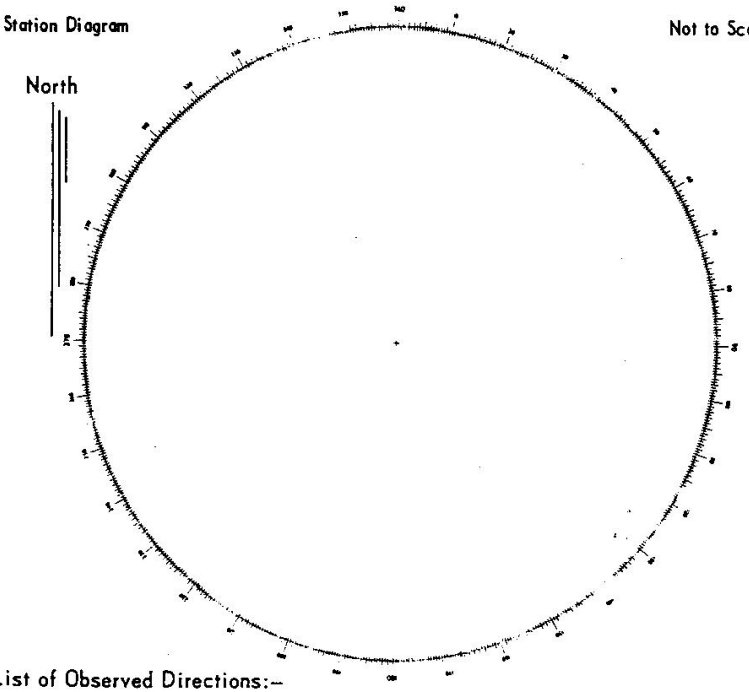

List of Observed Directions:–

Standpoint:

Station	Direction	Station	Direction

Standpoint:

Station	Direction	Station	Direction

Owners Name.....

Current Occupant.....

Address.....

Address.....

Access

ACCESS TO TS 2873 LOCKYER [P] 31/3/93

Note : Obtain Key from NP&WS for Locked gate on Old Northern Rd. 4WD needed.

0.0 Kulnura General Store at intersection of George Downey Dve & Green Rd.
Head North West along George Downey Dve towards Cessnock.

19.5 Mt McQuoid Intersection. Turn Left onto dirt road to Wisemans Ferry - St Albans - Windsor.

24.4 Sign "Welcome to Yengo National Park" Turn left onto narrow track.
Follow Old Northern Rd South.

27.2 Circuit Flat Bridge

30.55 Locked Gate

30.9 Turn Right along track on crest of ridge.

31.8 Park vehicle.
10 min walk - Climb boulders to top of ridge. head West along ridge to Trig.

Blessing.

D. West, Government Printer, New South Wales – 1976

TS2873 | Print Date: 31/05/2022 16:05 | No Of Pages: 4 | Property of DFSI – Spatial Services