Trigonometrical Survey of N.S.W.

Department of Lands

RECONNAISSANCE and MAINTENANCE REPORT

STATION TS KEMPSEY [P] 10611

This Trig. Station has been:-

Note: Cross out word or words which do not apply

1. Completely cleared to permit 360° vision to surrounding Trigs.
2. ~~Cleared by lanes bearing ..... from Trig. Mast~~
3. Trig. Mast & Vanes have been painted white & black respectively.
4. The Trig. was unpiled/~~not unpiled~~, dimensions now being:

   Description of mark ....Pillar Spigot.... should be explicit, e.g. Steel plug, Brass plug, Bolt, G.I. Pipe

   Height of mark ....0·00.... m above/below rock/concrete ..... m above/below G.L.

   Height of Top Vanes to Top Mark ....1·463.... m. Diameter of Vanes (vertical) ..0·595.. m.

   Height of ~~Cairn~~ Pillar ....1·345.... m. Diameter of Cairn ....—.... m.

   Length of Mast ....1·543.... m. (approximate if not unpiled)

5. ~~A ..... set in conc/rock has been placed ..... m. bearing ..... °M from Trig. Mast~~
6. A ..... set in conc/soil has been placed ..... m. bearing ..... °M from Trig. Mast
7. A ..... set in conc/soil has been placed ..... m. bearing ..... °M from Trig. Mast
8. A ..... set in conc/rock has been placed ..... m. bearing ..... °M from Trig. Mast
9. Connection ..... to ..... : ..... m. bearing ..... °M
10. Connection ..... to ..... : ..... m. bearing ..... °M
11. Connection ..... to ..... : ..... m. bearing ..... °M
12. Connection ..... to ..... : ..... m. bearing ..... °M
13. Diff. Ht. ..... is ..... m. above/below .....
14. Diff. Ht. ..... is ..... m. above/below .....
15. Diff. Ht. ..... is ..... m. above/below .....
16. ~~Diff. Ht. ..... is ..... m. above/below .....~~

Co: Dudley | Ph: Yarravel

Map Sheet: KEMPSEY 1:25000 | No: 9435-1-N

Inspected by: P. R. Heldon | Date: 18-7-78

Authority Lands Dept. | Field Book: 1053

Beacon Diagram — Not to Scale

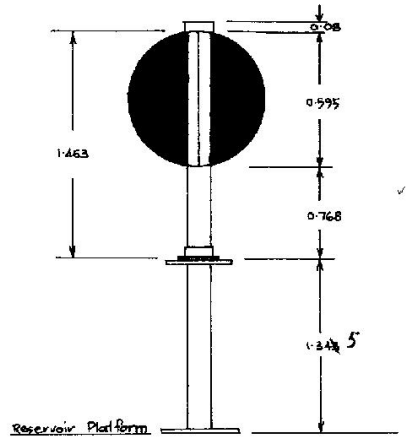

Date	Record of Station
18-7-78	First time occupied - Trig Obs.

Prepared by: P.R. HELDON. Checked: R Bryce Noted on U.T.M. Card Checked

TS10611 | Print Date: 31/05/2022 18:38 | No Of Pages: 2 | Property of DFSI – Spatial Services

STATION TS KEMPSEY [P] 10611

NB UNDER WEST KEMPSEY IN FB 1053 /23

Station Diagram

Not to Scale

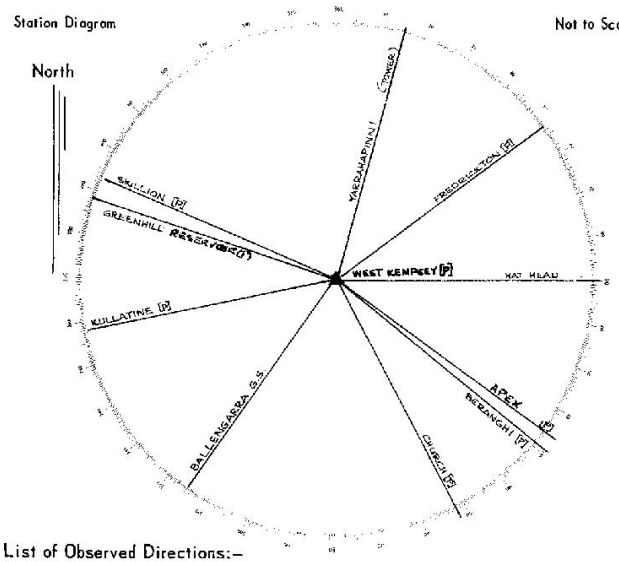

Owners Name Kempsey Council

Address

Current Occupant

Address

Access 18-7-1918

Situated atop reservoir in Greenfeilds St approx. 2½ Km west of West Kempsey P.O. on the road to Armidale

List of Observed Directions:–

Standpoint: Pillar Plate

Station	Direction
KULLATINE [P]	0° 00′ 00″
GREENHILL RESERVOIR [P]	34° 32′ 59″
SKILLION [P]	37 56 55
YARRAHAPINI (TOWER)	108 26 11
FREDRICKTON [P]	141 10 24

Standpoint: Pillar Plate

Station	Direction
HAT HEAD	175 22 20
APEX [P]	215° 07 51.8
BERANGHI [P]	271 58 49.0
CHURCH [P]	244 38 30.5
BALLENGARRA	314 20 59.2

Station	Direction	Station	Direction

TS10611 | Print Date: 31/05/2022 18:38 | No Of Pages: 2 | Property of DFSI – Spatial Services