Department of Lands

Integrated Survey of N.S.W.

RECONNAISSANCE and MAINTENANCE REPORT

STATION T.S. 10310 COGGAN (P)

Co HARDEN | Ph: MOONEY MOONEY

Map Sheet: COOLAC | No: 8528

Inspected by: R. TALBOT | Date: 22 · 6 · 1977

Authority DEPT. MAIN ROADS. | Field Book: 0001 · 206 PG 0614

This Trig. Station has been:-

Note: Cross out word or words which do not apply

1. Completely cleared to permit 360° vision to surrounding Trigs. ✓
2. Cleared by lanes bearing CLEAR ..... from Trig. Mast
3. Trig. Mast & Vanes have been painted white & black respectively. ✓
4. The Trig. was unpiled/not unpiled, dimensions now being:

   Description of mark CONCRETE PILLAR ..... should be explicit, e.g. Steel plug, Brass plug, Bolt, Concrete Pillar

   Height of mark 1·38 m above/below rock/concrete 0·1 m above/below G.L.

   Height of Top Vanes to ~~Top Mark~~/Top pillar plate 1·31 m Diameter of Vanes (vertical) 0·6 m.

   Height of Cairn ..... m. Diameter of Cairn ..... m.

   Length of Mast ..... m. (approximate if not unpiled)
5. A. COPPER SPIKE ..... set in conc/~~rock~~ has been ~~placed~~/fd 5·276 m. bearing 169 °M from Trig. ~~Mast~~/pillar
6. A. G.I.P. ..... set in conc/soil has been placed/fd 4·097 m. bearing 240 °M from Trig. ~~Mast~~/pillar
7. A ..... set in conc/soil has been placed/fd ..... m. bearing ..... °M from Trig. Mast/pillar
8. A ..... set in conc/rock has been placed/fd ..... m. bearing ..... °M from Trig. Mast/pillar
9. Connection COPPER SPIKE to G.I.P. : 5·493 m. bearing 305 °M
10. Connection ..... to ..... : ..... m. bearing ..... °M
11. Connection ..... to ..... : ..... m. bearing ..... °M
12. Connection ..... to ..... : ..... m. bearing ..... °M
13. Diff. Ht. COPPER SPIKE is 1·624 m. above/below PILLAR PLATE
14. Diff. Ht. G.I.P. is 1·351 m. above/below PILLAR PLATE
15. Diff. Ht. ..... is ..... m. above/below .....
16. Diff. Ht. ..... is ..... m. above/below .....

Beacon Diagram — Not to Scale

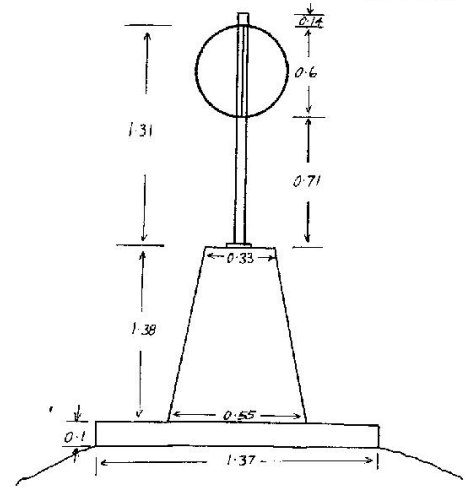

Date	Record of Station
14-12-76	Pillar erected.

Prepared by: G.F. BUCHNAR7 Checked: B. MITCHELL

TS10310 | Print Date: 31/05/2022 18:31 | No Of Pages: 2 | Property of DFSI – Spatial Services

STATION T.S. 1031 COGGAN (P) TS 10310

Station Diagram

Not to Scale

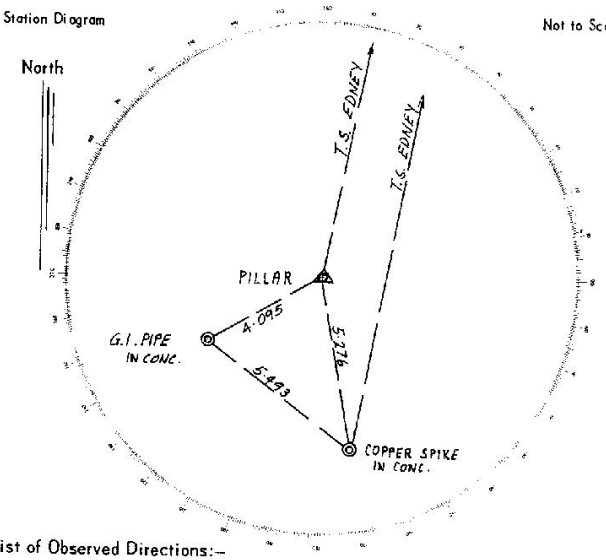

Owners Name.....

Address.....

.....

Current Occupant.....

Address.....

.....

Access 22-6-1977

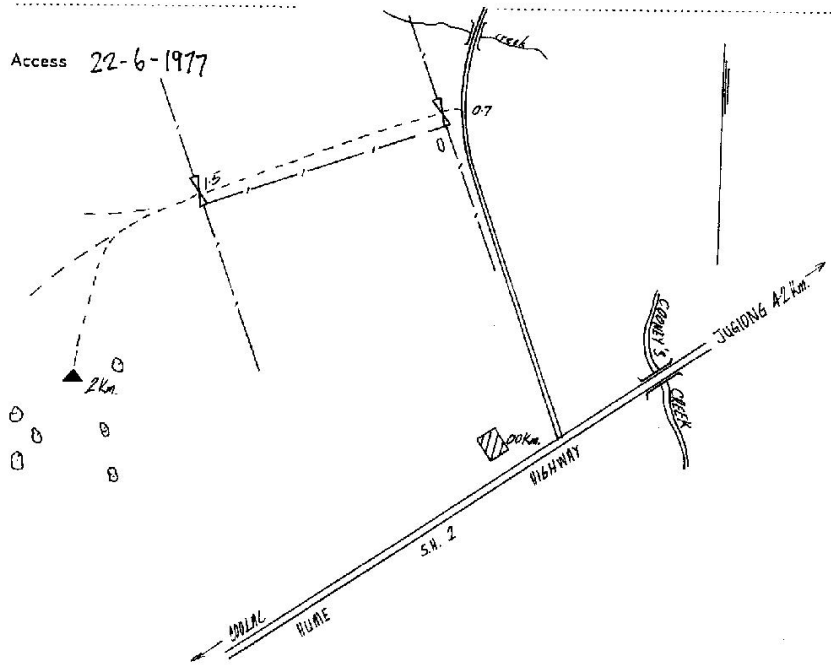

List of Observed Directions:–

Standpoint: CONC. PILLAR.

Station	Direction
T.S. EDNEY	0° 00' 00"
COPPER SPIKE IN CONC.	157° 49' 40"
G.I. PIPE IN CONC.	227° 56' 40"

Standpoint: COPPER SPIKE.

Station	Direction
T.S. EDNEY	0° 00' 00"
G.I. PIPE IN CONC.	292° 49' 40"
PILLAR	337° 30' 05"

Station	Direction	Station	Direction

D. West, Government Printer, New South Wales – 1976

TS10310 | Print Date: 31/05/2022 18:31 | No Of Pages: 2 | Property of DFSI – Spatial Services