TS10202 | Print Date: 31/05/2022 18:29 | No Of Pages: 2 | Property of DFSI – Spatial Services

75 19 3

Department of Lands

Integrati Survey of N.S.W.

RECONNAISSANCE and MAINTENANCE REPORT

TS 10202

STATION RIVERSTONE RES (P)	
Co:	Ph:
Map Sheet:	No:
Inspected by: W McGILLIVRAY	Date: 30-7-86
Authority SURVEY CONTROL BRANCH	Field Book:

Note: Cross out word or words which do not apply

This Trig. Station has been:-

1. Completely cleared to permit 360° vision to surrounding Trigs.
2. Cleared by lanes bearing ..... from Trig. Mast
3. Trig. Mast & Vanes have been painted white & black respectively.
4. The Trig. was unpiled/not unpiled, dimensions now being:

   Description of mark ..... should be explicit, e.g. Steel plug, Brass plug, Bolt, Concrete Pillar

   Height of mark ..... m above/below rock/concrete ..... m above/below G.L.

   Height of Top Vanes to Top Mark/Top pillar plate ..... m Diameter of Vanes (vertical) ..... m.

   Height of Cairn ..... m. Diameter of Cairn ..... m.

   Length of Mast ..... m. (approximate if not unpiled)

5. A ..... set in conc/rock has been placed/fd ..... m. bearing ..... °M from Trig. Mast/pillar
6. A ..... set in conc/soil has been placed/fd ..... m. bearing ..... °M from Trig. Mast/pillar
7. A ..... set in conc/soil has been placed/fd ..... m. bearing ..... °M from Trig. Mast/pillar
8. A ..... set in conc/rock has been placed/fd ..... m. bearing ..... °M from Trig. Mast/pillar
9. Connection ..... to ..... : ..... m. bearing ..... °M
10. Connection ..... to ..... : ..... m. bearing ..... °M
11. Connection ..... to ..... : ..... m. bearing ..... °M
12. Connection ..... to ..... : ..... m. bearing ..... °M
13. Diff. Ht. ..... is ..... m. above/below .....
14. Diff. Ht. ..... is ..... m. above/below .....
15. Diff. Ht. ..... is ..... m. above/below .....
16. Diff. Ht. ..... is ..... m. above/below .....

Beacon Diagram — Not to Scale

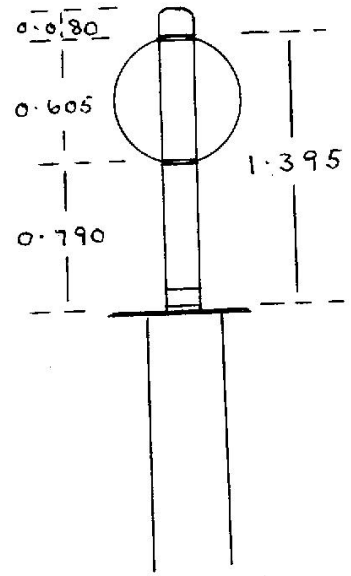

Date	Record of Station

Prepared by: Checked:

TS10202 | Print Date: 31/05/2022 18:29 | No Of Pages: 2 | Property of DFSI – Spatial Services

10202 | STATION TS RNERSTONE RES

Station Diagram

Not to Scale

North

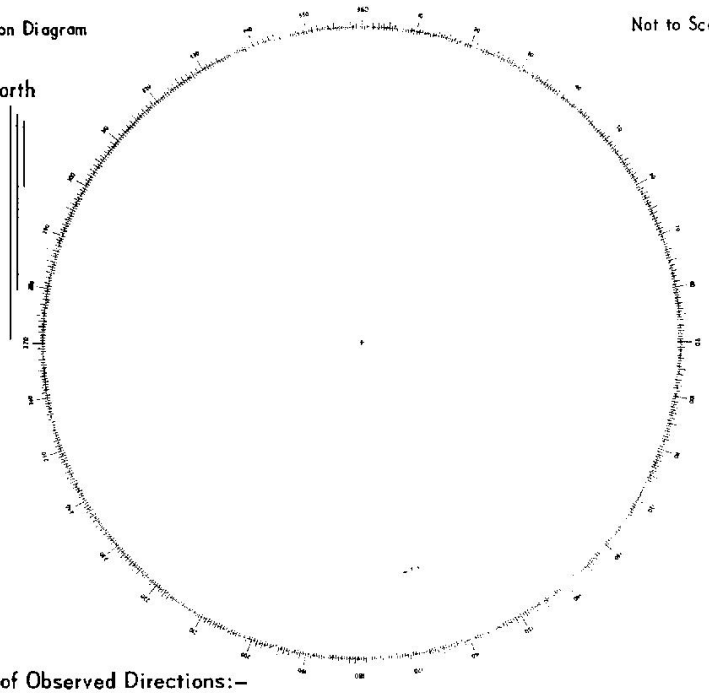

List of Observed Directions:–

Standpoint: Standpoint:

Station	Direction	Station	Direction

Station	Direction	Station	Direction

Owners Name ROAD MASTER TRUCKING COMPANY

Current Occupant

Address

Address

:2001

J. KWASNICA LPI

Access

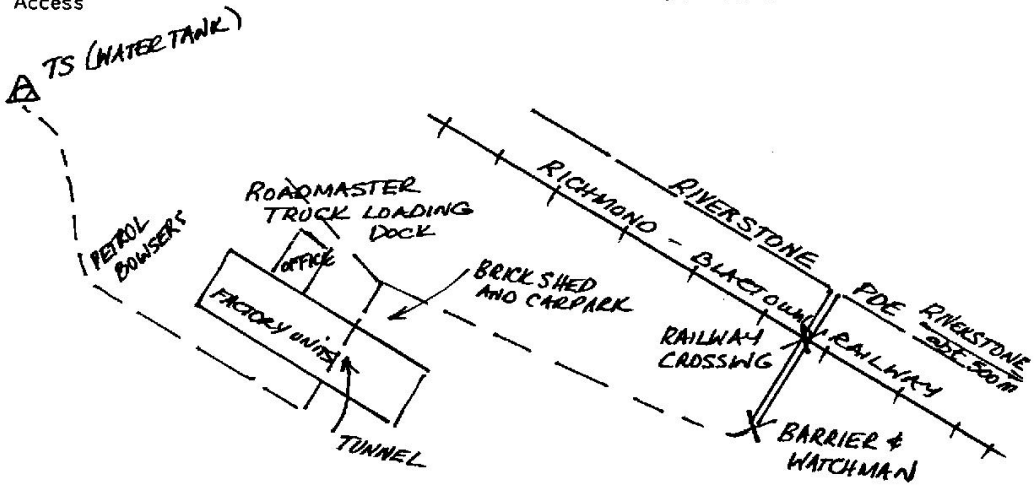

D. West, Government Printer, New South Wales – 1976