Department of Lands

Integration Su[illegible] of N.S.W.

RECONNAISSANCE and MAINTENANCE REPORT 10008

STATION Piccadilly (P) 10008 T.S.

Co: CUMBERLAND	Ph: ALEXANDRIA
Map Sheet: SYDNEY	No: 1845
Inspected by: L.M Hayes	Date: 24th May 1976
Authority Dept Lands	Field Book: GBL 104

This Trig. Station has been:-

Note: Cross out word or words which do not apply

1. Completely cleared to permit 360° vision to surrounding Trigs.
2. Cleared by lanes bearing ——— from Trig. Mast
3. Trig. Mast & Vanes have been painted white & black respectively.
4. The Trig. was unpiled/not unpiled, dimensions now being:

   Description of mark steel pillar should be explicit, e.g. Steel plug, Brass plug, Bolt, Concrete Pillar

   Height of mark 1·27 m above/below roof ~~top~~ ~~rock/concrete~~ ..... m above/below G.L.

   Height of Top Vanes to ~~Top Mark~~/Top pillar plate 1·495* m Diameter of Vanes (vertical) 0·60 m.

   Height of Cairn — m. Diameter of Cairn — m.

   Length of Mast 1·575 m. (approximate if not unpiled)
5. A.....set in conc/rock has been placed/fd .....m. bearing.....°M from Trig. Mast/pillar
6. A.....set in conc/soil has been placed/fd .....m. bearing.....°M from Trig. Mast/pillar
7. A.....set in conc/soil has been placed/fd .....m. bearing.....°M from Trig. Mast/pillar
8. A.....set in conc/rock has been placed/fd .....m. bearing.....°M from Trig. Mast/pillar
9. Connection.....to..... : ..... m. bearing.....°M
10. Connection.....to..... : ..... m. bearing.....°M
11. Connection.....to..... : ..... m. bearing.....°M
12. Connection.....to..... : ..... m. bearing.....°M
13. Diff. Ht. ..... is..... m. above/below .....
14. Diff. Ht. ..... is..... m. above/below .....
15. Diff. Ht. ..... is..... m. above/below .....
16. Diff. Ht. ..... is..... m. above/below .....

Beacon Diagram

Not to Scale

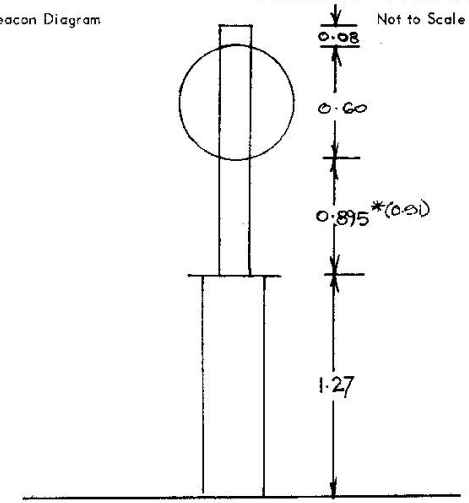

Date	Record of Station
12·3·76	BEACON ERECTED
21·9·76	Mast leaning (due to Storm on 21·9·76) To mast 287°M 0·035m.
* 22·9·76	Mast corrected new AM 1·51 TD.
8·5·77	As per previous insert – Relation to Circular Quay PDF&3

Prepared by: L.M Hayes 4-6-76. Checked: [illegible]

TS10008 | Print Date: 31/05/2022 18:26 | No Of Pages: 2 | Property of DFSI – Spatial Services

STATION Piccadilly (P) 10008 T.S.

Station Diagram — Not to Scale

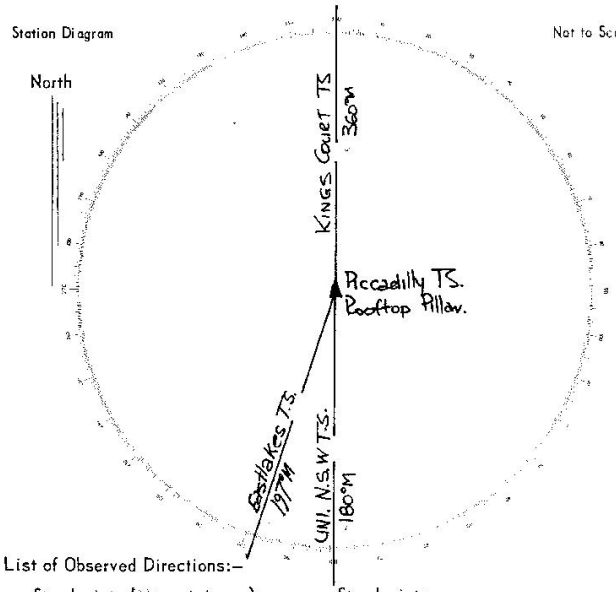

Owners Name ..... Current Occupant .....

Address ..... Address .....

24/5/1976

Access Conventional Vehicle

UBD Map 68 Reference. J. 7 Access off Fullerton St Edgecliff
Contact Caretaker of Piccadilly Gardens Building; Ground
floor he will give instructions and Key re access to rooftop & T.S.

List of Observed Directions:–

Standpoint: Pillar. (8/3/77) Standpoint:

Station	Direction	Station	Direction
Kosciuse T.S.	351 51 00		
Uni. NSW	138° 52 53 7		
Circular Quay	251° 45' 12"		

Station	Direction	Station	Direction

TS10008 | Print Date: 31/05/2022 18:26 | No Of Pages: 2 | Property of DFSI – Spatial Services